ASMC-QxB2-Txxxx
Envisium™ 0.5W Power PLCC-4
Surface Mount LED Indicator

Data Sheet

Lead (Pb) Free
RoHS 6 fully
compliant



Envisium™

Envisium™ is the premier class of mid-Power LEDs using TS AlInGaP chip technology. Envisium™ LEDs offer unparalleled performance, engineering and design flexibility.

Description

The Envisium™ 0.5W Power PLCC-4 SMT LED is an extension of Envisium™ Power PLCC-4 SMT LEDs. The package can be driven at high current due to its superior package design. The product is able to dissipate the heat more efficiently compared to the Envisium™ Power PLCC-4 SMT LEDs. These LEDs produce higher light output with better flux performance compared to the Envisium™ Power PLCC-4 SMT LED.

The Envisium™ 0.5W Power PLCC-4 SMT LEDs are designed for higher reliability, better performance, and operate under a wide range of environmental conditions. The performance characteristics of these new mid-power LEDs make them uniquely suitable for use in harsh conditions such as in automotive applications, and in electronics signs and signals.

To facilitate easy pick and place assembly, the LEDs are packed in EIA-compliant tape and reel. Every reel is shipped in single intensity and color bin (except for red), to provide close uniformity. These LEDs are compatible with the IR solder reflow process.

Envisium™ 0.5W Power PLCC-4 SMT LED is available in red orange & amber colors.

Features

- Industry Standard PLCC 4 platform (3.2 x 2.8 x 1.9mm)
- High reliability LED package
- Mid-Power intensity brightness with optimum flux performance using TS AlInGaP chip technologies
- Available in Red Orange and Amber colors
- High optical efficiency
- Available in 8mm carrier tape and 7 inch reel
- Low Thermal Resistance
- Super wide viewing angle at 120°
- Longer life time with minimum degradation due to enhanced silicone resin material
- JEDEC MSL 2a

Applications

1. Exterior automotive
   - Turn signals
   - Side repeaters
   - CHSML
   - Rear combination lamp
   - Side markers
   - Truck clearance lamp
2. Electronic signs and signals
   - Channel lettering
   - Contour lighting
   - Indoor variable message sign
3. Office automation, home appliances, industrial equipment
   - Front panel backlighting
   - Push button backlighting
   - Display backlighting

Component Dimensions

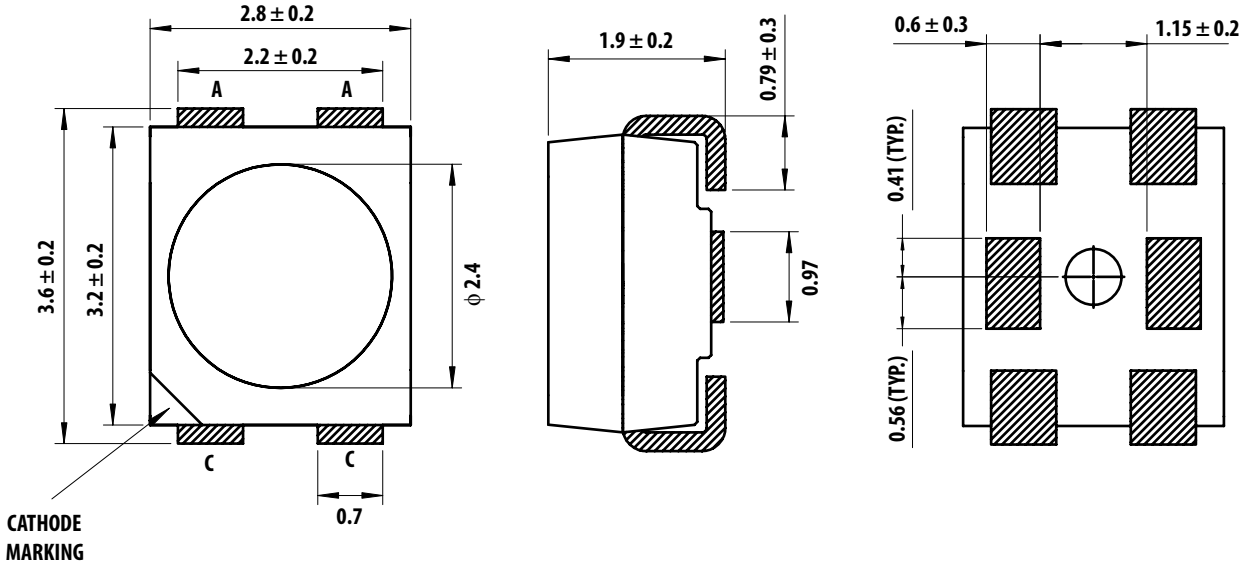

Note:
1. All Dimensions in millimeters.
2. Lead Polarity as shown in Figure 12.
3. Terminal Finish: Ag plating
4. Encapsulation material: Silicone resin

Figure 1. Package Drawing

Table 1. Device Selection Guide ($T_J = 25$ °C)

		Luminous Flux, ϕ_V [1] (lm)				
Color	**Part Number**	**Min. Flux (lm)**	**Typ. Flux (lm)**	**Max. Flux (lm)**	**Test Current (mA)**	**Dice Technology**
Amber	ASMC-QAB2-TAC0E	4.30	6.60	9.00	150	AlInGaP
Red Orange	ASMC-QHB2-TCD0E	7.00	9.30	11.50	150	AlInGaP

Notes:
1. ϕ_V is the total luminous flux output as measured with an integrating sphere at mono pulse conditions.
2. Tolerance = ±12%

Part Numbering System

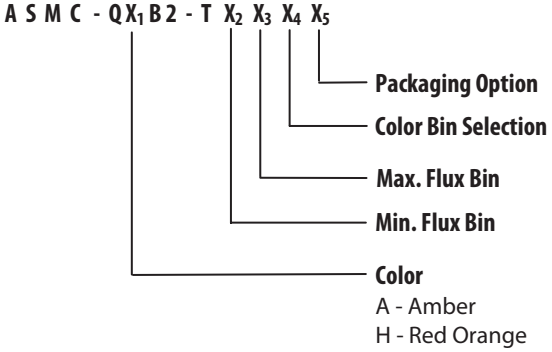

Table 2. Absolute Maximum Ratings ($T_A = 25\ ^\circ C$)

Parameters	ASMC-QxB2-Txxxx
DC Forward Current [1]	150 mA
Peak Forward Current [2]	300 mA
Power Dissipation	470 mW
Reverse Voltage	5 V
Junction Temperature	125 °C
Operating Temperature	-40 °C to +100 °C
Storage Temperature	-40 °C to +100 °C

Notes:
1. Derate Linearly as shown in Figure 6.
2. Duty Factor = 10%, Frequency = 1kHz

Table 3. Optical Characteristics ($T_J = 25\ ^\circ C$)

Color	Part Number	Dice Technology	Dominant Wavelength λ_D [1] (nm)	Viewing Angle $2\theta_{1/2}$ [2] (Degrees)	Luminous Efficiency η_e (lm/W)	Total Flux / Luminous Intensity F_V (lm) / I_V (cd)
			Typ.	Typ.	Typ.	Typ.
Amber	ASMC-QAB2-Txxxx	AlInGaP	593.5	120	17	6.5
Red Orange	ASMC-QHB2-Txxxx	AlInGaP	619.3	120	24	5.0

Notes:
1. The dominant wavelength, λ_D, is derived from the CIE Chromaticity diagram and represents the color of the device.
2. $\theta_{1/2}$ is the off-axis angle where the luminous intensity is ½ the peak intensity.

Table 4. Electrical Characteristics ($T_J = 25\ ^\circ C$)

Part Number	Forward Voltage V_F (Volts) @ I_F = 150 mA		Reverse Voltage V_R @ 100μA	Thermal Resistance $R\theta_{J-P}$ (°C/W)
	Typ.	Max.	Min.	
ASMC-QxB2-Txxxx	2.64	3.10	5	60

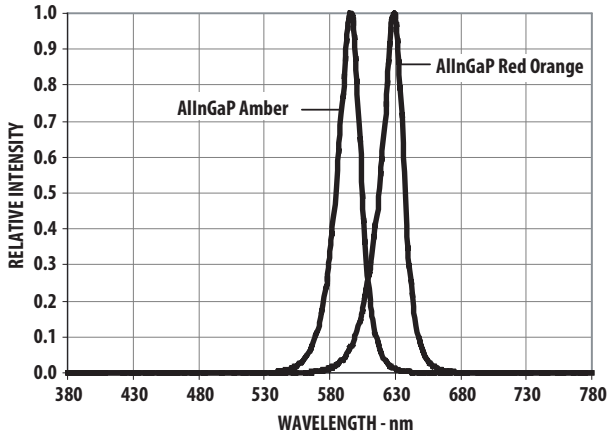

Figure 2. Relative Intensity Vs. Wavelength

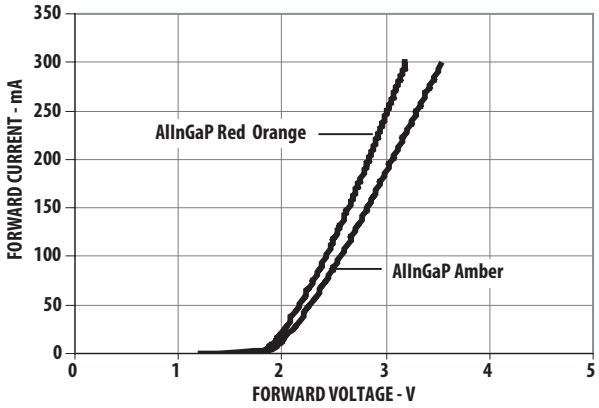

Figure 3. Forward Current Vs. Forward Voltage

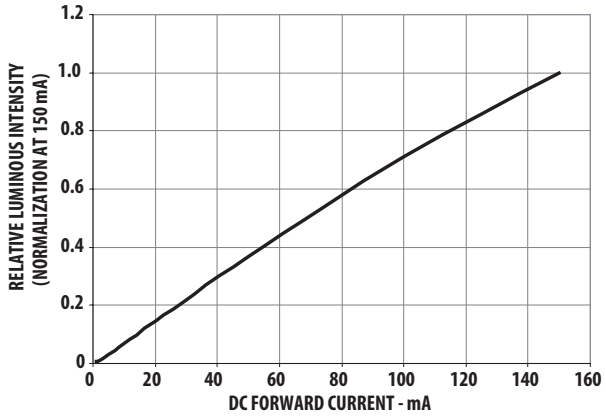

Figure 4. Relative Intensity Vs. Forward Current

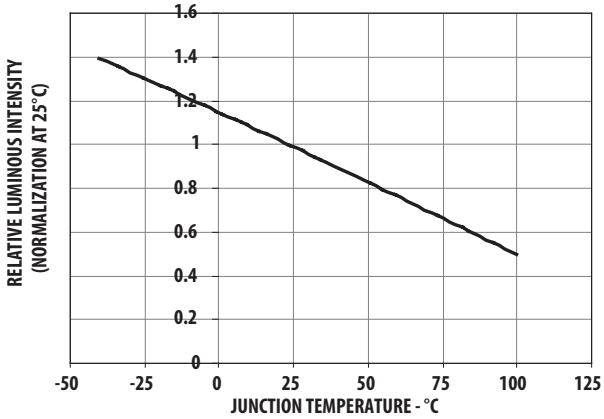

Figure 5. Relative Intensity Vs. Temperature

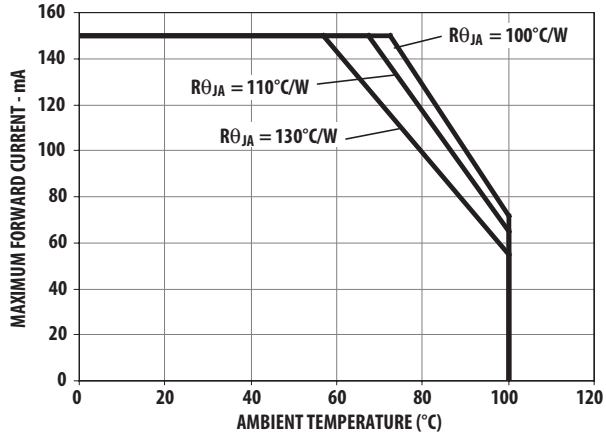

Figure 6a. Maximum Forward Current Vs. Ambient Temperature. Derated Based on T_{JMAX} = 125°C, $R\theta_{J-A}$=130 °C/W, 110°C/W and 100°C/W

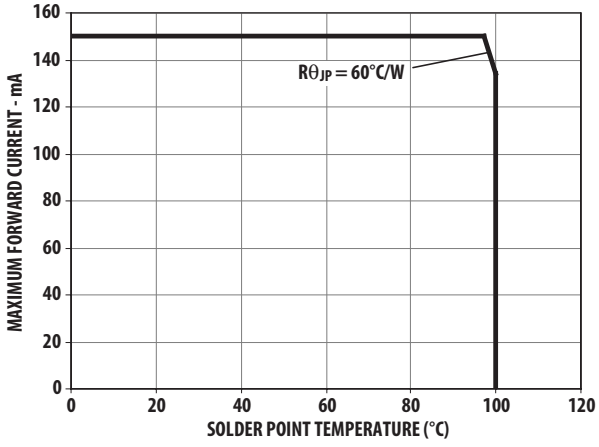

Figure 6b. Maximum Forward Current Vs. Solder Point Temperature. Derated Based on T_{JMAX} = 125°C, $R\theta_{JP}$ = 60°C/W

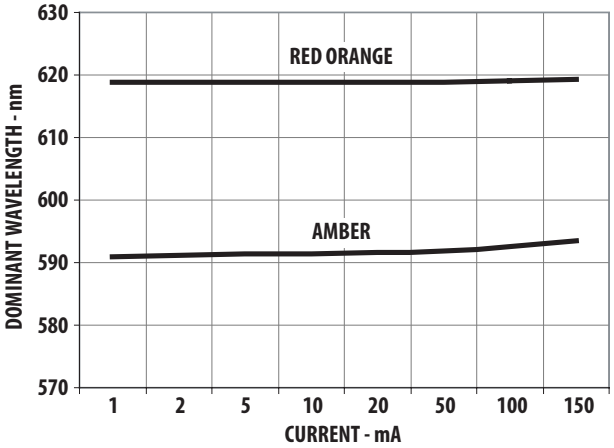

Figure 7. Dominant Wavelength Vs. Forward Current - AlInGaP Devices

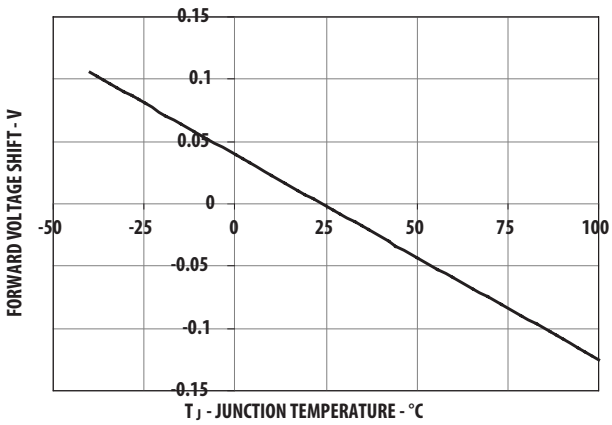

Figure 8. Forward Voltage Shift Vs. Temperature

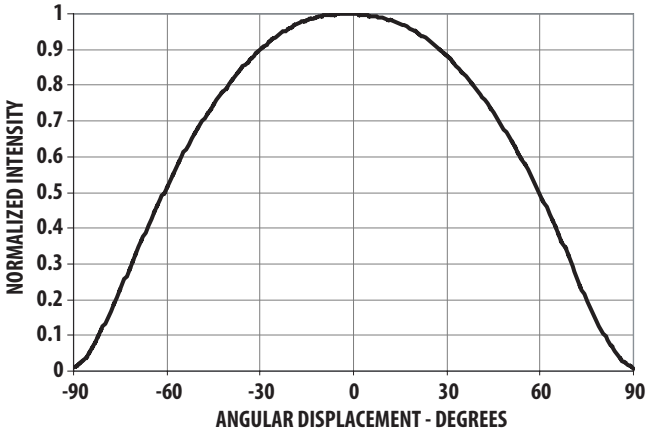

Figure 9. Radiation Pattern

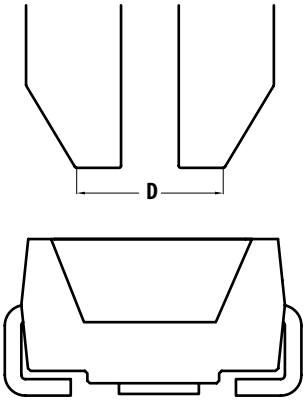

Note: Diameter "D" should be smaller than 2.2mm

Figure 10. Recommended Pick and Place Nozzle Size

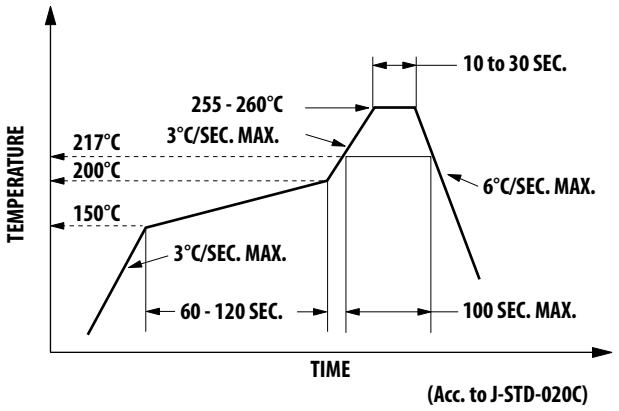

Figure 11. Recommended Pb-free Reflow Soldering Profile

Note: For detail information on reflow soldering of Avago surface mount LEDs, do refer to Avago Application Note AN 1060 Surface Mounting SMT LED Indicator Components

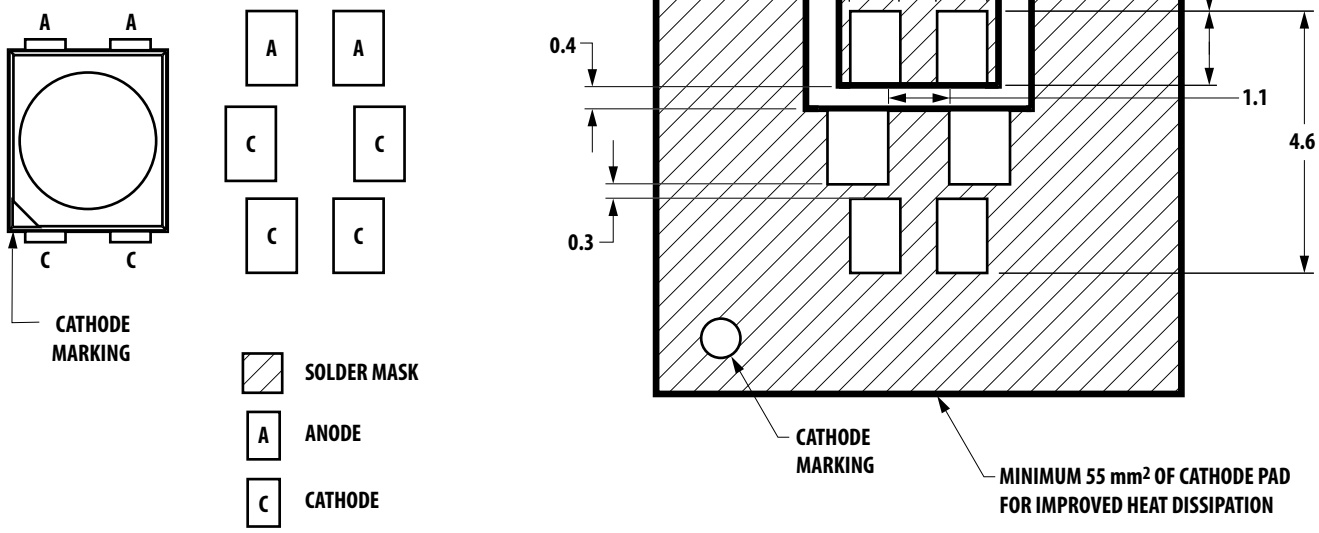

Figure 12. Recommended Soldering Pad Pattern

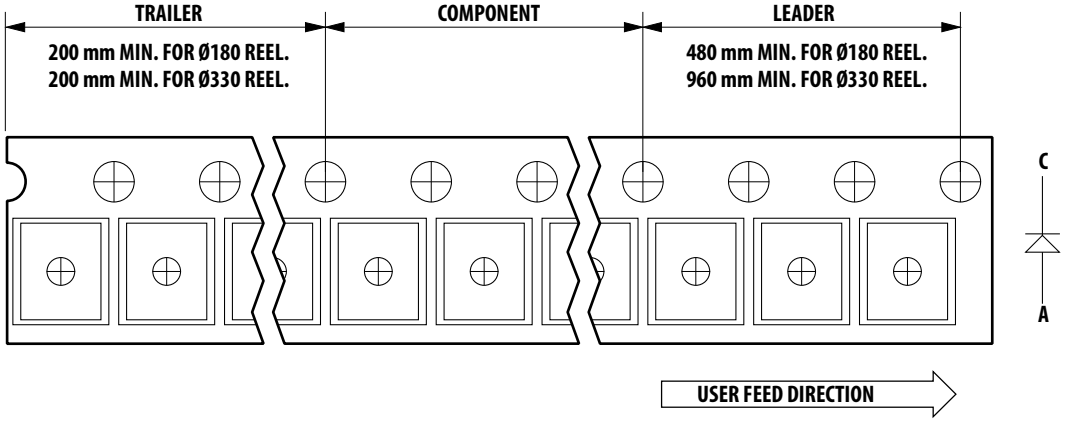

Figure 13. Tape Leader and Trailer Dimensions

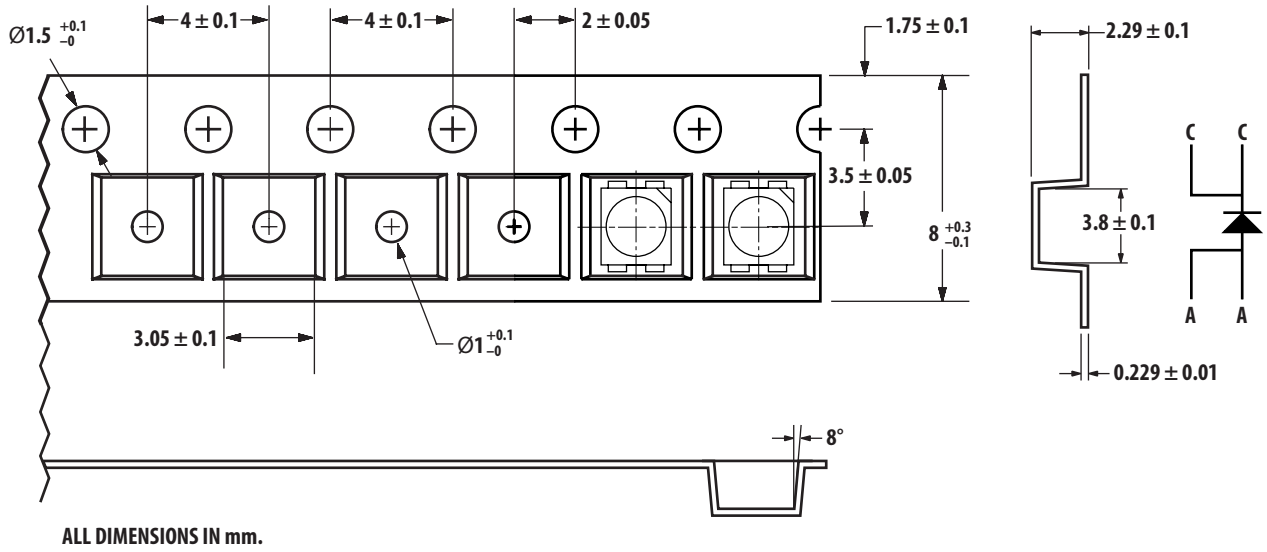

ALL DIMENSIONS IN mm.

Figure 14. Tape Dimensions

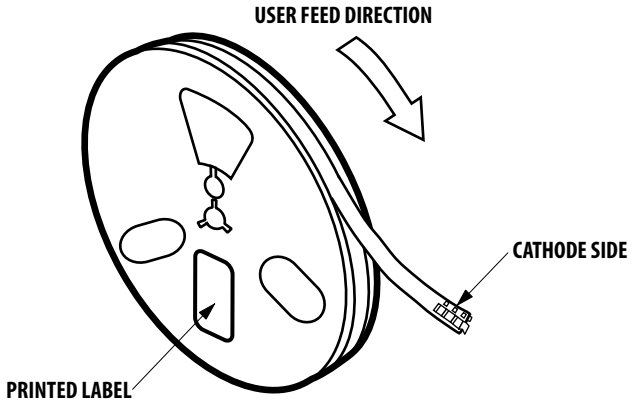

Figure 15. Reeling Orientation

Device Color (X_1)

A	Amber
H	Red Orange

Flux Bin Select (X_2X_3)

Individual reel will contain parts from one bin only

X_2	Min Flux Bin
X_3	Max Flux Bin

Flux Bin Limits

Bin ID	Min. (lm)	Max. (lm)
A	4.30	5.50
B	5.50	7.00
C	7.00	9.00
D	9.00	11.50
E	11.50	15.00
F	15.00	19.50
G	19.50	25.50
H	25.50	33.00
J	33.00	43.00
K	43.00	56.00
L	56.00	73.00

Tolerance of each bin limit = ± 12%

Color Bin Select (X_4)

Individual reel will contain parts from one full bin only.

X_4	
0	Full Distribution
A	1 and 2 only
B	2 and 3 only
C	3 and 4 only
D	4 and 5 only
E	5 and 6 only
G	1, 2 and 3 only
H	2, 3 and 4 only
J	3, 4 and 5 only
K	4, 5 and 6 only
M	1, 2, 3 and 4 only
N	2, 3, 4 and 5 only
P	3, 4, 5 and 6 only
R	1, 2, 3, 4 and 5 only
S	2, 3, 4, 5 and 6 only
Z	Special Color Bin

Color Bin Limits

Amber/Yellow	Min. (nm)	Max. (nm)
2	583.0	586.0
3	586.0	589.0
4	589.0	592.0
5	592.0	595.0
6	595.0	598.0

Red Orange	Min. (nm)	Max. (nm)
1	611.0	616.0
2	616.0	620.0
3	620.0	625.0

Tolerance of each bin limit = ±1nm

Packaging Option (X_5)

Option	Test Current	Package Type	Reel Size
E	150mA	Top Mount	7 Inch

VF Binning

Bin	Min.	Max.
2D	2.35	2.50
2E	2.50	2.65
2F	2.65	2.80
2G	2.80	2.95
2H	2.95	3.10
2J	3.10	3.25

Tolerance of each bin = ±0.1V

Handling Precaution

The encapsulation material of the product is made of silicone for better reliability of the product. As silicone is a soft material, please do not press on the silicone or poke a sharp object onto the silicone. These might damage the product and cause premature failure. During assembly of handling, the unit should b e held on the body only. Please refer to Avago Application Note AN 5288 for detail information.

Moisture Sensitivity

This product is qualified as Moisture Sensitive Level 2a per Jedec J-STD-020. Precautions when handling this moisture sensitive product is important to ensure the reliability of the product. Do refer to Avago Application Note AN5305 Handling of Moisture Sensitive Surface Mount Devices for details.

A. Storage before use

- Unopen moisture barrier bag (MBB) can be stored at <40°C/90%RH for 12 months. If the actual shelf life has exceeded 12 months and the HIC indicates that baking is not required, then it is safe to reflow the LEDs per the original MSL rating.
- It is not recommended to open the MBB prior to assembly (e.g. for IQC).

B. Control after opening the MBB

- The humidity indicator card (HIC) shall be read immediately upon opening of MBB.
- The LEDs must be kept at <30°C / 60%RH at all time and all high temperature related process including soldering, curing or rework need to be completed within 672 hours.

C. Control for unfinished reel

- For any unuse LEDs, they need to be stored in sealed MBB with desiccant or desiccator at <5%RH.

D. Control of assembled boards

- If the PCB soldered with the LEDs is to be subjected to other high temperature processes, the PCB need to be stored in sealed MBB with desiccant or desiccator at <5%RH to ensure no LEDs have exceeded their floor life of 672 hours.

E. Baking is required if:

- "10%" is Not blue and "5%" HIC indicator turns pink.
- The LEDs are exposed to condition of >30°C / 60% RH at any time.
- The LEDs floor life exceeded 672 hours.

Recommended baking condition: 60±5°C for 20 hours.

For product information and a complete list of distributors, please go to our web site: **www.avagotech.com**

Avago, Avago Technologies, and the A logo are trademarks of Avago Technologies in the United States and other countries.
Data subject to change. Copyright © 2005-2009 Avago Technologies. All rights reserved.
AV02-0397EN - September 29, 2009